COMID

Valvola a Farfalla Lug
da DN40 a DN300 PN10/PN16

Lug Butterfly Valve
from DN40 to DN300 PN10/PN16

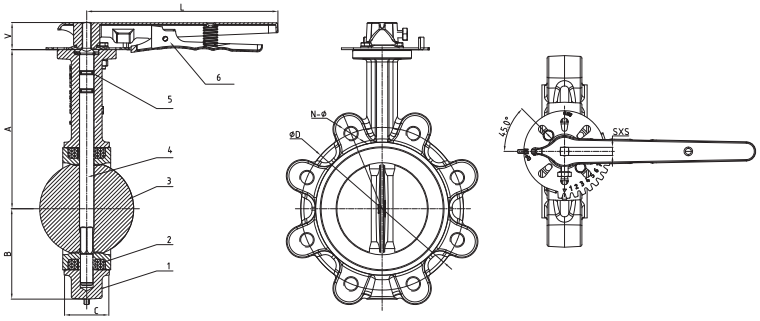

- Design Standard: BS EN 593
- Connection Ends: BS EN 1092-2 PN10/PN16
- Working Pressure: PN10/16
- Temperature Range: 0℃ - 80℃
- Coating: Fusion Bonded Epoxy Coating in accordance with ANSI/AWWA C550

MATERIAL SPECIFICATION

Part No.	Part	Standard Specification
1	Body	EN-GJS-450-10
2	Seat	EPDM
3	Disc	SS304
4	Stem	SS420
5	O-Ring	NBR
6	Lever	Carbon Steel

Note: For special material request other than standard specification, please indicate clearly on the inquiry or order list.

WRAS APPROVED PRODUCT

DN		Dimensions(mm)								
Inch	mm	A	B	C	D	V	N-Ø	SXS	L	ISO5211
1.5"	40	138	64.5	33	110	30	4-M16	9X9	212	F05
2"	50	140.5	64.5	43	125	30	4-M16	9X9	212	F05
2.5"	65	153	72	46	145	30	4-M16	9X9	212	F05
3"	80	157.5	86	46	160	30	8-M16	9X9	212	F05
4"	100	176	100	52	180	30	8-M16	9X9	212	F05
5"	125	191	112	56	210	30	8-M16	14X14	256	F07
6"	150	202.5	128	56	240	30	8-M20	14X14	256	F07
8"	200	243.5	162	60	295	39	12-M20	17X17	373	F10
10"	250	273	194	68	355	39	12-M24	22X22	373	F10
12"	300	311	223	78	410	39	12-M24	22X22	373	F10